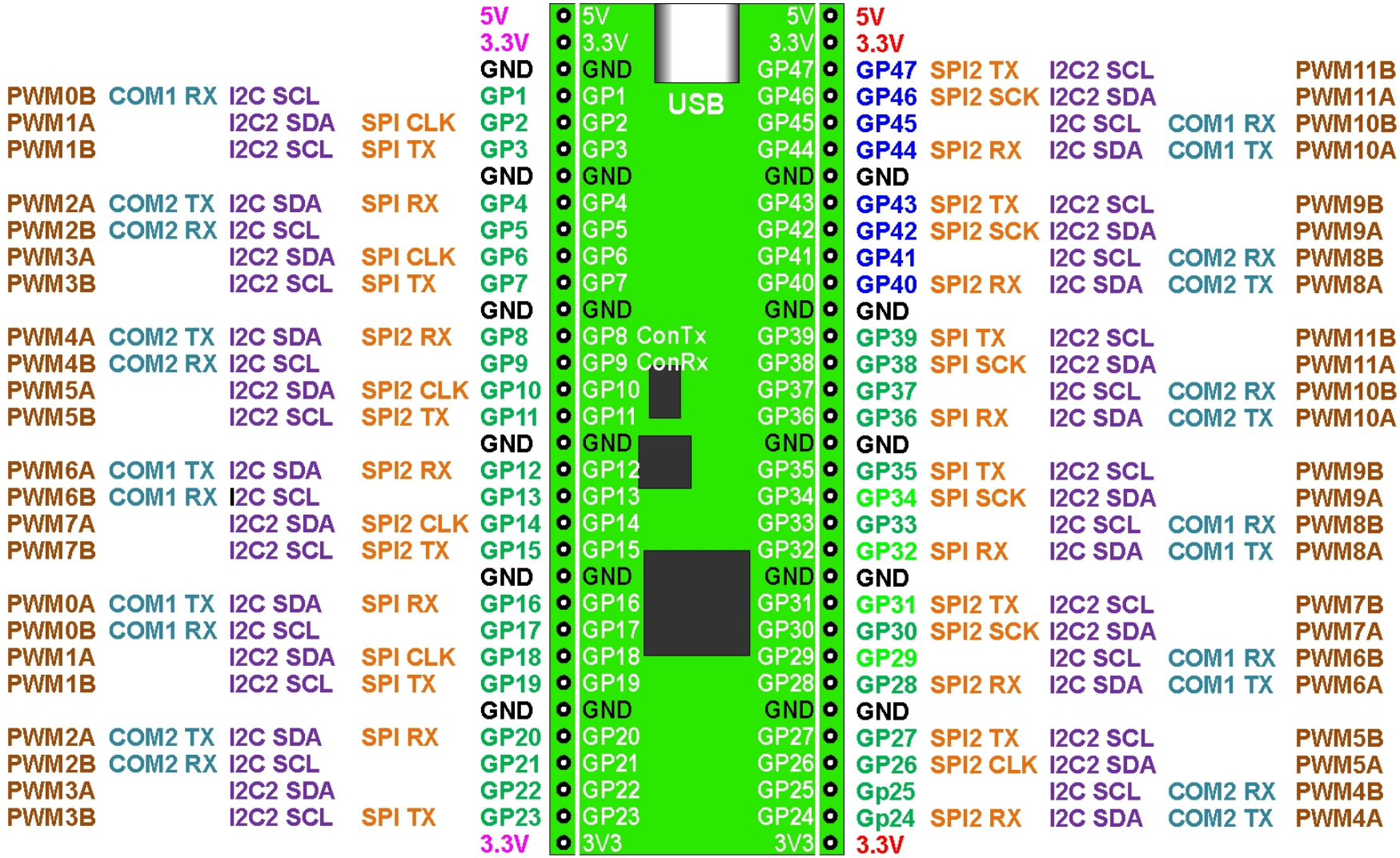

GPXX Digital input 5V tolerant when powered

Pico2350DIL

GPXX Digital/Analogue input NOT 5V tolerant

Note: Use digital pull-ups only for inputs; use external resistors <8K for pull-downs.